EagleBurgmann®
Rely on excellence

API 682 4th edition Category 2/3 Configurations

Mechanical seals

Piping plans

Seal supply systems

Configuration

3CW-BB

Category 2 and 3

Configuration 3CW-BB (Contacting Wet – Back-to-Back)

EagleBurgmann mechanical seals applicable for this configuration

	Seal type A (Balanced pusher seals)	Seal type B (Metal bellows seals with O-Rings)	Seal type C (Metal bellows seals with flexible graphite)
ROTATING	■ H75A4-B ■ LL9DKUU	■ LY9DZSS	■ MBS682P-D
STATIONARY			

Engineered seals

Beyond API specifications, EagleBurgmann offers a comprehensive range of engineered seals tailored to customer's specification. Please inquire.

API piping plans applicable for 3CW-BB configuration

Process side

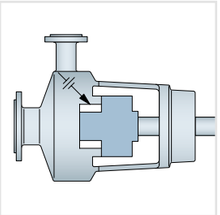

Plan 01
Integral (internal) recirculation from the pump discharge to the seal chamber.

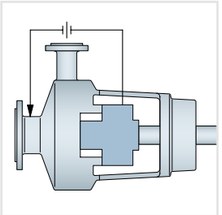

Plan 13*
Recirculation from the seal chamber through a flow control orifice and back to the pump suction or pump suction piping.

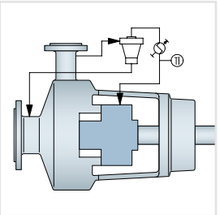

Plan 41
Recirculation from the pump discharge through a cyclone separator delivering the clean fluid to a cooler and then to the seal chamber. The solids are delivered to the pump suction line.

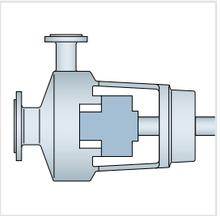

Plan 02
Dead-ended seal chamber with no recirculation of flushed fluid. Flush connections plugged.

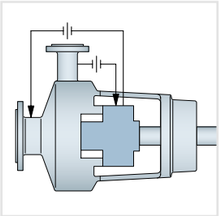

Plan 14*
Recirculation from pump discharge through a flow control orifice to the seal and simultaneously from the seal chamber through a flow control orifice to pump suction.

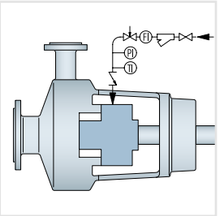

Plan 32
Injection of clean fluid into the seal chamber from an external source.

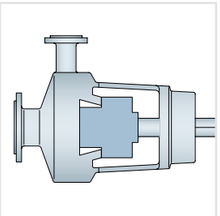

Plan 03
Circulation between the seal chamber and the pump created by the design of the seal chamber. Flush connections plugged.

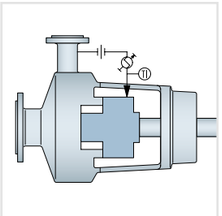

Plan 21 (22)*
Recirculation from pump discharge through a flow control orifice and cooler (in Plan 22 through a strainer, a flow control orifice and a cooler) into the seal chamber.

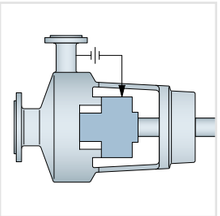

Plan 11 (12)*
Recirculation from the pump discharge through a flow control orifice (in Plan 12 through a strainer and a flow control orifice) into the seal chamber.

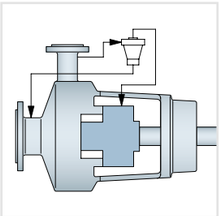

Plan 31
Recirculation from the pump discharge through a cyclone separator delivering the clean fluid to the seal chamber. The solids are delivered to the pump suction line.

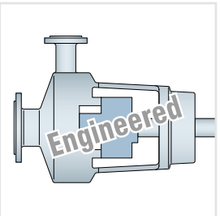

Plan 99
Engineered piping plan not defined by other existing plans.

EagleBurgmann seal supply systems and components

Plans	Products
21 (22)	WEF6 Water cooler, WEL6 Air cooler, SPT6 Temperature indicator
31	ZYA6 Cyclone separator
41	WEF6 Water cooler, WEL6 Air cooler, SPT6 Temperature indicator, ZYA6 Cyclone separator
32	SPX6 Flush unit
53A	TSA6 Barrier/buffer fluid system, TSB6 Barrier/buffer fluid system
53B	SPB6 Barrier fluid system with bladder accumulator
53C	SPC6 Barrier fluid system with piston accumulator
65A	LSA6 Leakage collection reservoir
65B	LSB6 Leakage collection reservoir
54, 62 (61), 99	Engineered to customer's specifications

Between seals

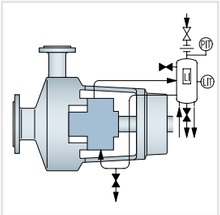

Plan 53A
Pressurized barrier fluid reservoir supplying clean fluid for an arrangement 3 pressurized dual seal.

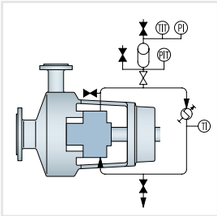

Plan 53B
Barrier fluid system pressurized by a bladder accumulator supplying clean liquid for an arrangement 3 pressurized dual seal.

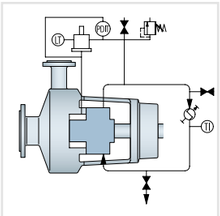

Plan 53C
Barrier fluid system pressurized by a piston accumulator supplying clean liquid for an arr. 3 pressurized dual seal. The barrier pressure is generated from the seal chamber pressure. The system is self-energizing and reacts to fluctuations in the seal chamber fluid pressure.

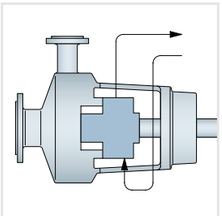

Plan 54
Pressurized external barrier fluid system supplying clean liquid for an arrangement 3 pressurized dual seal. The barrier liquid is maintained at a pressure greater than seal chamber pressure and is circulated by an external pump or pressure system.

Atmospheric side

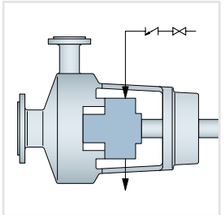

Plan 62 (61)*
Quench stream from an external source to the atmospheric side of the seal faces. The quench stream can be low-pressure steam, nitrogen or clean water. (Plan 61: tapped and plugged atmospheric-side connections for purchaser's use.)

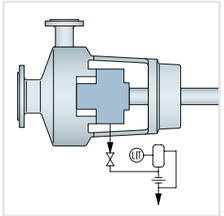

Plan 65A*
Atmospheric leakage collection and alarm system for condensing leakage. Failure of the seal will be detected by an excessive flow rate into the leakage collection system.

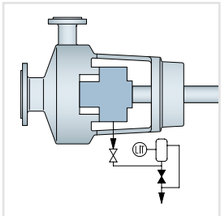

Plan 65B*
Atmospheric leakage collection and detection system for condensing leakage. Failure of the seal will be detected by a cumulative leakage into the system.

* Possible

The API experts

EagleBurgmann is one of the leading international system providers of sealing technology. For more than 20 years we have been actively contributing our expertise to developing and implementing the API 682 standard for the selection and application of seals and supply systems in centrifugal and rotary pumps.

Solutions for more safety and productivity

The new 4th edition of API 682 is in line with the latest achievements and current developments. EagleBurgmann offers the widest portfolio of seals and seal supply systems acc. to API 682 4th edition, and consequently has the optimum product for each API-compliant requirement: technically mature, practical solutions that provide significantly greater safety and process reliability in refining technology, petrochemical, oil & gas and chemical industries.

eagleburgmann.com

Important note

All the technical specifications are based on extensive tests and our many years of experience. However, the diversity of possible applications means that they can serve as guide values only.

It should be noted that the extremal values of each operating parameter cannot be applied at the same time because of their interaction. Furthermore, the operating range of each specific product depends on the respective shaft diameter, materials used, mode of operation and on the medium to be sealed.

A guarantee can only be given in the individual case if the exact conditions of application are known and these are confirmed in a special agreement. When critical conditions of operation are involved, we recommend consulting with our specialist engineers.

Subject to change.

Seal type A

H75A4-B

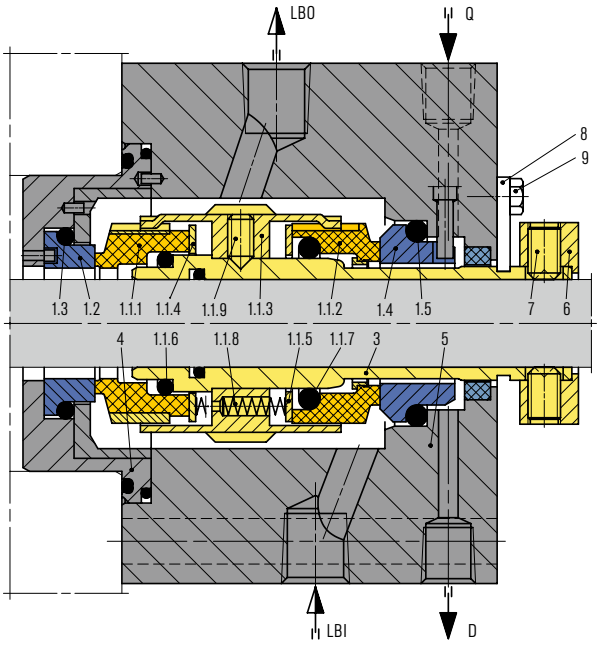

Features

- API 682 Category 2 and 3, Type A, Arrangement 3 seal
- Dual seal in back-to-back arrangement
- Same size of inboard and outboard seal
- Balanced
- Cartridge unit
- Rotating multiple springs
- Integrated pumping device
- Suitable for pressure reversals

Advantages

- Universally applicable both for retrofits or original equipment
- Efficient stock keeping due to standardized components
- Extended selection of materials
- Extended field of operation in terms of temperature and pressure
- Metal parts also in special materials available
- Safe operation due to metal torque transmission at the rotating carbon seal rings

Recommended applications

- Refining technology
- Oil and gas industry
- Petrochemical industry
- Chemical industry
- Power plant technology
- Highly volatile hydrocarbons
- LPG plants
- API 610/ISO 13709 pumps
- Process pumps

Operating range (see note on page 3)

Shaft diameter: d = 20 ... 110 mm (0.79" ... 4.33")
Pressure: p1 = ... 42 bar (609 PSI)
Temperature: t = –40 °C ... +176 °C
(–40 °F ... +350 °F)*
Sliding velocity: vg = 23 m/s (76 ft/s)
Axial movement: d ≤40 mm ±1.0 mm, d >40 mm ±1.5 mm
* Engineered up to 260 °C (500 °F) with FFKM (K) secondary seals

Materials

Seal rings: Blister resistant carbon,
Silicon carbide SSiC (Q1), RBSiC (Q2)
Mating rings: Silicon carbide SSiC (Q1), RBSiC (Q2)
Secondary seals: EPDM (E), NBR (P), FKM (V), FFKM (K)
Springs: C-276 (M5)
Metal parts: CrNiMo steel 316 (G) or equivalent,
optional materials on request.

Recommended piping plans

Process side*:
01, 02, 03, 11, 12, 13, 14, 21, 22, 31, 32, 41
Between seals: 53A, 53B, 53C, 54
Atmospheric side**: 61, 62, 65A, 65B
* Piping plans 11 ... 41:
Integration in seal to be dimensionally checked.
** Throttle bushing on request.

Item	Description
1.1.1, 1.1.2	Seal ring
1.1.3	Driver
1.1.4, 1.1.5	Thrust ring
1.1.6, 1.1.7, 1.3, 1.5	O-Ring
1.1.8	Spring
1.1.9, 7	Set screw
1.2, 1.4	Mating ring
3	Seal sleeve
4, 5	Gland plate
6	Set ring
8	Setting device
9	Hexagon bolt
LBO	Liquid barrier OUT
Q	Quench
LBI	Liquid barrier IN
D	Drain

Seal type A

LL9DKUU

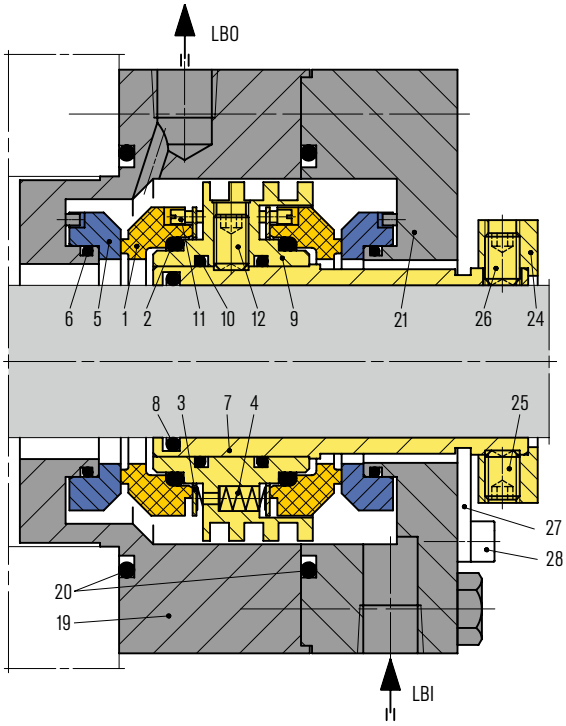

Features

- API 682 Category 2 and 3, Type A, Arrangement 3 seal
- Dual seal in back-to-back arrangement
- Same size of inboard and outboard seal
- Balanced
- Cartridge unit
- Rotating multiple springs
- Solid seal faces

Advantages

- Compact design
- Low heat generation and power consumption due to narrow seal face width
- Longer seal life
- Pressure-balanced design prevents mating ring being forced out under reverse pressure
- No damage to shaft sleeve as dynamic O-Ring is not in direct contact with the sleeve

Recommended applications

- Refining technology
- Oil and gas industry
- Petrochemical industry
- Chemical industry
- Power plant technology
- Highly volatile hydrocarbons
- LPG plants
- API 610/ISO 13709 pumps
- Process pumps

Operating range (see note on page 3)

Shaft diameter: d1 = 20 ... 110 mm (0.79" ... 4.33")
Pressure: p = vacuum ... 42 bar (... 609 PSI)
Temperature: t = –40 °C ... +176 °C (–40 °F ... +349 °F)*
Sliding velocity: vg ... 23 m/s (... 75 ft/s)
* Engineered up to 260 °C (500 °F) with FFKM (K) secondary seals

Materials

Seal rings: Blister resistant carbon,
Silicon carbide SSiC (Q1), RBSiC (Q2)
Mating rings: Silicon carbide SSiC (Q1), RBSiC (Q2)
Secondary seals: FKM (V), FFKM (K), EPDM (E), NBR (P)
Springs: Hastelloy® C-276 (M5)
Metal parts: CrNiMo steel 316 (G)

Recommended piping plans

Process side:
01, 02, 03, 11, 12, 13, 14, 21, 22, 31, 32, 41
Between seals: 53A, 53B, 53C, 54
Atmospheric side*: 61, 62, 65A, 65B
* Throttle bushing on request.

Item	Description
1	Seal ring
2, 6, 8, 10, 20	O-Ring
3	Thrust ring
4	Spring
5	Mating ring
7	Seal sleeve
9	Pumping ring
11	Drive screw
12, 25, 26	Set screw
19, 21	Gland plate
24	Drive collar
27	Setting device
28	HSH Cap screw
LBO	Liquid barrier OUT
LBI	Liquid barrier IN

Seal type B

LY9DZSS

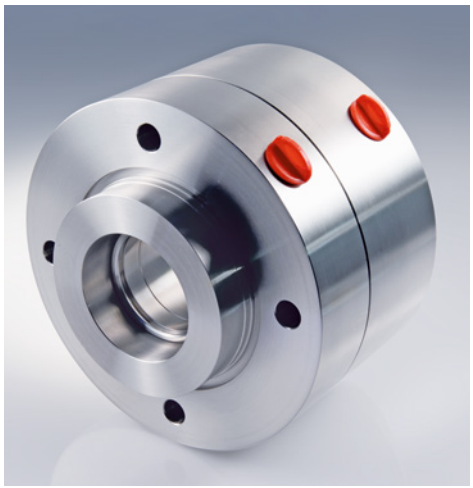

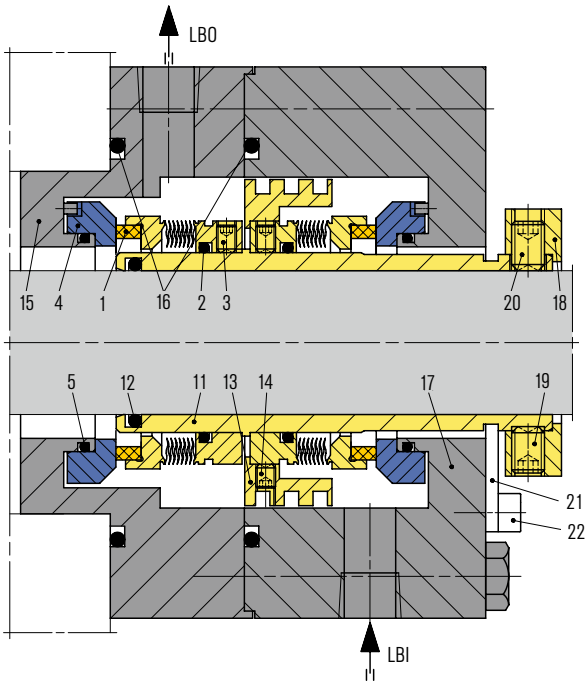

Features

- API 682 Category 2 and 3, Type B, Arrangement 3 seal
- Dual seal in back-to-back arrangement
- Same seal size of inboard and outboard seal
- Balanced
- Cartridge unit
- Rotating metal bellows
- Shrink fitted seal rings and solid mating rings

Advantages

- Compact design
- Bellows design allows use of balanced seal with plain sleeve
- Absence of dynamic O-Ring eleminates/reduces seal face hang-up
- Bellows design minimizes variation in face load due to shaft expansion or face wear
- Resistant to abrasive particles in the medium, no shaft or sleeve fretting
- Low heat generation and power consumption due to narrow seal face width
- Longer seal life

Recommended applications

- Refining technology
- Oil and gas industry
- Petrochemical industry
- Chemical industry
- Power plant technology
- LPG plants
- API 610/ISO 13709 pumps
- Process pumps

Operating range (see note on page 3)

Shaft diameter: d1 = 20 ... 110 mm (0.79" ... 4.33")
Pressure: p = vacuum ... 20 bar (290 PSI)
Temperature: t = –40 °C ... +200 °C (–40 °F ... +392 °F)
Sliding velocity: vg ... 23 m/s (75 ft/s)

Materials

Seal rings: Blister resistant carbon
Mating rings: Silicon carbide SSiC (Q1), RBSiC (Q2)
Bellows: Hastelloy® C-276 (M5),
option: Inconel® 718 (M6)
Secondary seals: FKM (V), FFKM (K), EPDM (E), NBR (P)
Metal parts: CrNiMo steel 316 (G), Hastelloy® C-276 (M5)

Recommended piping plans

Process side:
01, 02, 03, 11, 12, 13, 14, 21, 22, 31, 32, 41
Between seals: 53A, 53B, 53C, 54
Atmospheric side*: 61, 62, 65A, 65B
* Throttle bushing on request

Item	Description
1	Seal ring with bellows unit
2, 5, 12, 16	O-Ring
3, 14, 19, 20	Set screw
4	Mating ring
11	Seal sleeve
13	Pumping ring
15, 17	Gland plate
18	Drive collar
21	Setting device
22	HSH Cap screw
LBO	Liquid barrier OUT
LBI	Liquid barrier IN

Seal type C

MBS682P-D

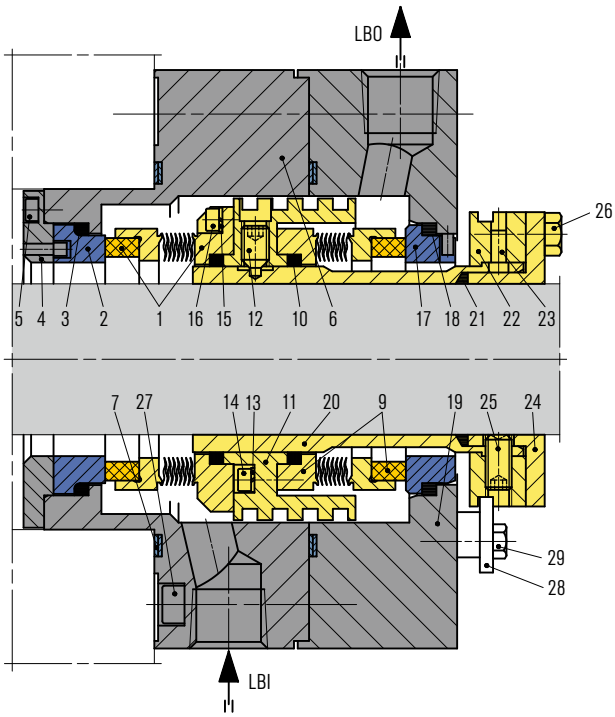

Features

- API 682 Category 2 and 3, Type C, Arrangement 3 seal
- Dual seal in back-to-back arrangement
- Balanced
- Cartridge unit
- Rotating metal bellows
- Shrink fitted seal rings and solid mating rings

Advantages

- Compact design
- Suited for applications with extreme high and low temperatures
- Absence of dynamic O-Ring eleminates/reduces seal face hang-up
- Bellows design minimizes variation in face load due to shaft expansion or face wear
- Resistant to abrasive particles in the medium, no shaft or sleeve fretting
- Also available in double ply design

Recommended applications

- Refining technology
- Oil and gas industry
- Petrochemical industry
- Chemical industry
- Power plant technology
- LPG plants
- API 610/ISO 13709 pumps
- Process pumps

Operating range (see note on page 3)

Shaft diameter: d1 = 20 ... 110 mm (0.79" ... 4.33")
Pressure single ply bellows:
p = vacuum ... 25 bar (... 363 PSI)*
Pressure double ply bellows:
p = vacuum ... 35 bar (... 508 PSI)
Temperature: t = –75 °C ... +400 °C (–103 °F ... +752 °F)
Sliding velocity: vg ... 23 m/s (... 75 ft/s)
* p >20 bar (290 PSI) on request.

Materials

Seal rings: Blister resistant carbon,
Silicon carbide SSiC (Q1), RBSiC (Q2)
Mating rings: Silicon carbide SSiC (Q1), RBSiC (Q2)
Bellows: Inconel® 718 (M6)
Secondary seals: Graphite (G)
Metal parts: CrNiMo steel 316 (G),
Carpenter® 42 (T4)

Recommended piping plans

Process side:
01, 02, 03, 11, 12, 13, 14, 21, 22, 31, 32, 41
Between seals: 53A, 53B, 53C, 54
Atmospheric side*: 61, 62, 65A, 65B
* Throttle bushing on request

Item	Description
1, 9	Seal ring with bellows unit
2, 17	Mating ring
3, 10, 18, 21	Graphite ring
4	Clamp ring
5, 14, 16, 27	HSH Cap screw
6, 19	Gland plate
7	Gasket
11	Pumping ring
12, 25	Set screw
13, 15	Spring washer
20	Seal sleeve
22	Drive collar
23	Pin
24	Clamping sleeve
26, 29	Hexagon bolt
28	Setting device
LBO	Liquid barrier OUT
LBI	Liquid barrier IN

Plans 21 (22), 41

WEF6 Water cooler

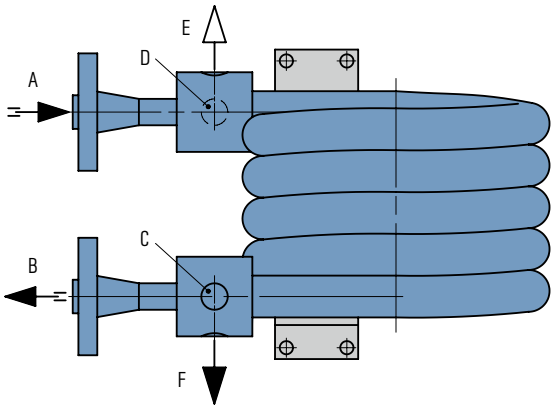

Features

Heat exchangers of the WEF6000-A4 range are used to cool process/barrier fluids in seal supply circuits. WEF6000-A4 heat exchangers are fully compliant with API 682 4th edition regulations. The process/barrier medium is directed through the tube, and the cooling medium is directed through the shell.

Venting and draining of the process/barrier medium side as well as the cooling water side is ensured. In addition, the heat exchangers can also be combined with a temperature instrument in the supply line to the mechanical seal (optional in accordance with API 682 4th edition).

Advantages

- Operating limits up to 45 bar/260 °C (653 PSI/500 °F) (tube side): suitable for a wide range of demanding operating conditions.
- Cooling water side and process side can be completely vented and drained
- Seamless pipes on process side
- Special design without welding inside the cooler
- Higher cooling water velocity due to innovative cooler design
- Stainless steel 316L: high resistance to corrosive media

Recommended applications

- Refining technology
- Oil and gas industry
- Petrochemical industry
- Chemical industry
- Power plant technology

Notes

Design and production in accordance with EU Pressure Equipment Directive PED 97/23 EC.
Design, calculation and production acc. to ASME VIII, Div. 1 (cooler not subject to ASME stamp requirements, piping <6")

Cleaning: Process/barrier medium side and cooling water side: flush with a suitable solvent.

Item	Description
A	From mechanical seal
B	To mechanical seal
C	Cooling water IN
D	Cooling water OUT
E	Vent
F	Drain

Product variants

Designation	**WEF6100-A4**		**WEF6100-A4**		**WEF6000-A4**		**WEF6000-A4**	
Type of heat exchanger	ASME		PED		ASME		PED	
	Tube	Shell	Tube	Shell	Tube	Shell	Tube	Shell
Process connections	Flange 3/4", 600 lbs	NPT 3/4"	Flange 3/4", 600 lbs	NPT 3/4"	Flange 3/4", 600 lbs	Flange 3/4", 300 lbs	Flange 3/4", 600 lbs	Flange 3/4", 300 lbs
Drain/vent connection	NPT 1/2"		NPT 1/2"		NPT 1/2"		NPT 1/2"	
Allowable pressure[1]	45 bar (653 PSI)	16 bar (232 PSI)	45 bar (653 PSI)	16 bar (232 PSI)	45 bar (653 PSI)	16 bar (232 PSI)	45 bar (653 PSI)	16 bar (232 PSI)
Allowable temperature cooling water side (shell side)[1]	–29 °C ... +150 °C (–20 °F ... +302 °F)		–29 °C ... +150 °C (–20 °F ... +302 °F)		–29 °C ... +150 °C (–20 °F ... +302 °F)		–29 °C ... +150 °C (–20 °F ... +302 °F)	
Allowable temperature process/ barrier medium side (tube side)[1]	–29 °C ... +260 °C (–20 °F ... +500 °F)		–29 °C ... +260 °C (–20 °F ... +500 °F)		–29 °C ... +260 °C (–20 °F ... +500 °F)		–29 °C ... +260 °C (–20 °F ... +500 °F)	
Cooling capacity (kW)[2]	10		10		10		10	
Cooling capacity (kW)[3]	3		3		3		3	
Required cooling water quantity (m^3/h)	0.6		0.6		0.6		0.6	
Metal parts	316L		316L		316L		316L	

Other versions on request.
[1] Design data, permissible working values depend on the actual conditions of service.
[2] Guidelines with buffer/barrier fluid water 60 °C (140 °F) – cooling water 20 °C (68 °F).
[3] Guidelines with buffer/barrier fluid oil 60 °C (140 °F) – cooling water 20 °C (68 °F).

Plans 21 (22), 41

WEL6 Air cooler

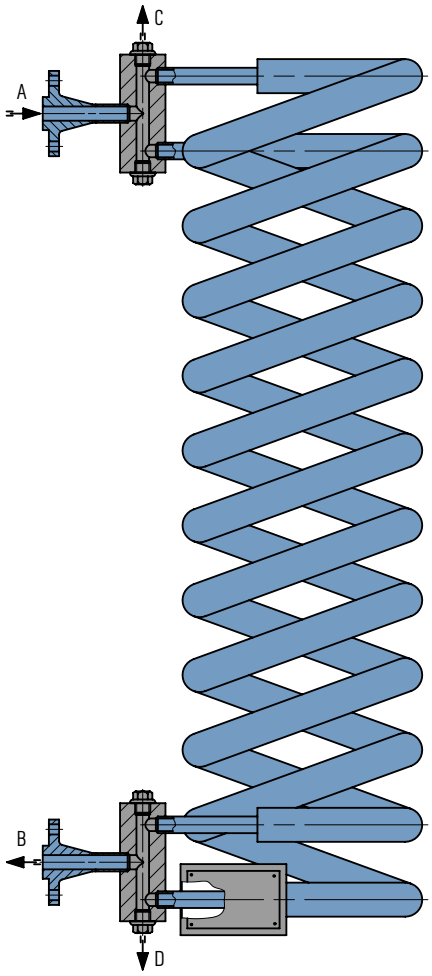

Features

Heat exchangers of the WEL6000-A4 range (shown here: WEL6002-A4) are used to cool process/barrier fluids in seal supply circuits. The heat exchangers are made of helical, laserwelded finned tubes. The cooling medium is ambient air. It is important, therefore, for WEL heat exchangers to be installed in well ventilated places indoors or, ideally, outdoors. There is a choice of three different basic versions of the WEL6000-A4 range as well as supplied fully assembled together with valves, base frame and other system components.

Advantages

- Operating limits up to 44 bar/260 °C (638 PSI/500 °F) (tube side): suitable for a wide range of demanding operating conditions.
- Can be completely vented and drained
- Seamless pipes
- Stainless steel 316L: high resistance to corrosive media

Recommended applications

- Refining technology
- Oil and gas industry
- Petrochemical industry
- Chemical industry
- Power plant technology

Notes

Design and production in accordance with EU Pressure Equipment Directive PED 97/23 EC.
Design, calculation and production acc. to ASME VIII, Div. 1 (cooler not subject to ASME stamp requirements, piping <6")

Item	Description
A	From mechanical seal
B	To mechanical seal
C	Vent
D	Drain

Product variants

Designation	WEL6001-A4A001-D0		WEL6002-A4A001-D0		WEL6003-A4A001-D0	
Type of heat exchanger	ASME	PED	ASME	PED	ASME	PED
Number of finned tubes	1		2 finned tubes switched in parallel		2 finned tubes switched in parallel and doubled length	
Connections	Flange 3/4", 600 lbs		Flange 3/4", 600 lbs		Flange 3/4", 600 lbs	
Drain/vent connection	Flange 1/2", 600 lbs [4]		Flange 1/2", 600 lbs [4]		Flange 1/2", 600 lbs [4]	
Allowable pressure[1]	44 bar (638 PSI)	44 bar (638 PSI)	44 bar (638 PSI)	44 bar (638 PSI)	44 bar (638 PSI)	44 bar (638 PSI)
Allowable temperature process/ barrier medium side (tube side)[1]	−29 °C ... +260 °C (−20 °F ... +500 °F)		−29 °C ... +260 °C (−20 °F ... +500 °F)		−29 °C ... +260 °C (−20 °F ... +500 °F)	
Cooling capacity (kW)[2]	1.5		2		3	
Cooling capacity (kW)[3]	1.2		1.5		2	
Volume (liters)	1.2		2.4		4.8	
Metal parts	316L		316L		316L	

Other versions on request.
[1] Design data, permissible working values depend on the actual conditions of service.
[2] Guidelines with buffer/barrier fluid water 60 °C (140 °F) – ambient temperature 20 °C (68 °F); moved air at min. 0.7 m/s (2.3 ft/s); product flow rate 8 l/min.
[3] Guidelines with buffer/barrier fluid oil 60 °C (140 °F) – ambient temperature 20 °C (68 °F); moved air at min. 0.7 m/s (2.3 ft/s); product flow rate 8 l/min.
[4] Version with screwed connection G1/2" available as an option.

Plans 31, 41

ZYA6 Cyclone separator

Features

The ZY6000-A4 range is available in three versions:

ZYA6000-A4:
Cyclone separator for high flow rates and high pressures.

ZYB6000-A4:
Cyclone separator for high flow rates and high pressures; 100 % X-ray capability.

ZYC6000-A4:
Cast version, block-type design with integral flanges.

Advantages

- Contamination is automatically conveyed to the suction nozzle of the pump: maintenance-free mode of operation for guaranteed reliability
- High filtration efficiency
- Wide range of products for the optimum solution for every application
- ZYA6000-A4 and ZYB6000-A4: available for operating pressures of up to 200 bar (2,900 PSI)
- ZYC6000-A4 in block-type design with integrated flange connections: low space requirements because of compact design

Functional description

Cyclone separators of the ZY6000-A4 range are used to clean mainly aqueous liquids containing contamination such as dirts and solids (e. g., in circulation systems of sewage, sludge or pipeline pumps).

The best possible filtration efficiency is achieved when the specific weight of the solids is much higher than that of the carrier liquid and when the differential pressure is as large as possible within the permissible pressure range (min. 1.7 bar (24.7 PSI) in accordance with API 682). The viscosity of the medium is a factor that also needs to be taken into account.

ZYA6000

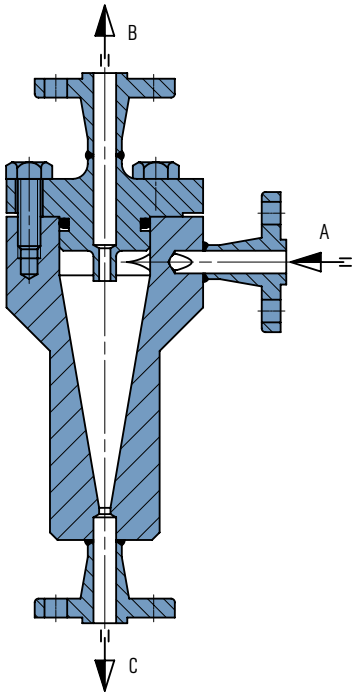

Recommended applications

- Refining technology
- Oil and gas industry
- Petrochemical industry
- Chemical industry
- Power plant technology

Installation

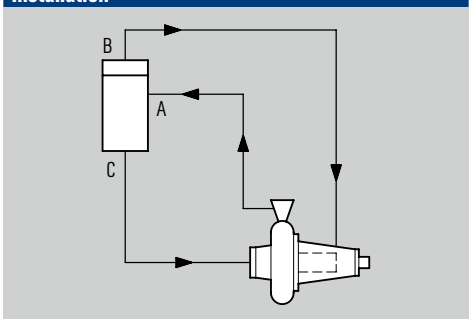

P&ID for ZY6000-A4 Cyclone separators
A Contaminated liquid IN
B Clean liquid OUT
C Separated liquid OUT

Product variants

ZYB6000

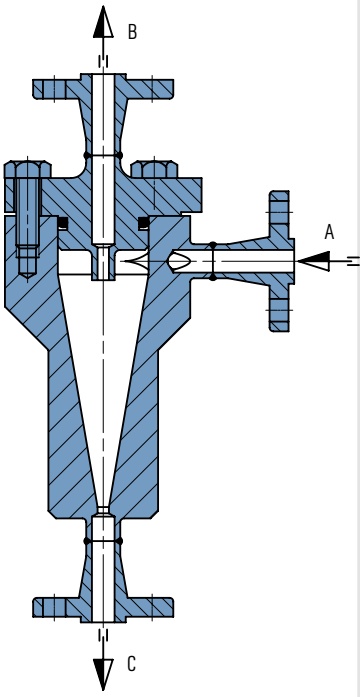

ZYC6000

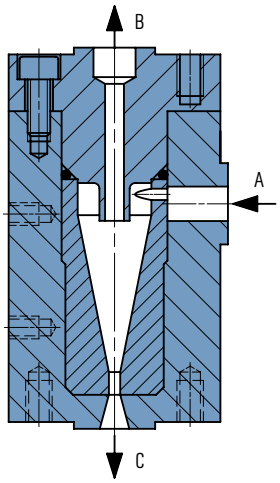

Product variants

Designation	ZYA6000	ZYB6000	ZYC6000
Features	Standard	100 % X-ray capability	Cast version
Connections – product inlet	Flange 3/4", 600 lbs	Flange 3/4", 600 lbs	Integral flange 3/4", 600 lbs
Connections – clean product outlet	Flange 3/4", 600 lbs	Flange 3/4", 600 lbs	Integral flange 3/4", 600 lbs
Connections – contaminated product outlet	Flange 3/4", 600 lbs	Flange 3/4", 600 lbs	Integral flange 3/4", 600 lbs
Allowable pressure[1]	60 bar (870 PSI)	60 bar (870 PSI)	60 bar (870 PSI)
Temperature range	–29 °C ... +150 °C (–20 °F ... +302 °F)	–29 °C ... +150 °C (–20 °F ... +302 °F)	–29 °C ... +150 °C (–20 °F ... +302 °F)
O-Ring[2]	Viton®	Viton®	Viton®
Wetted parts	316L	316L	316L

Other versions on request.
[1] Max. permissible working values depend on version.
[2] Other materials on request, e. g. FKM, EPDM.

Plan 32

SPX6 Flush unit

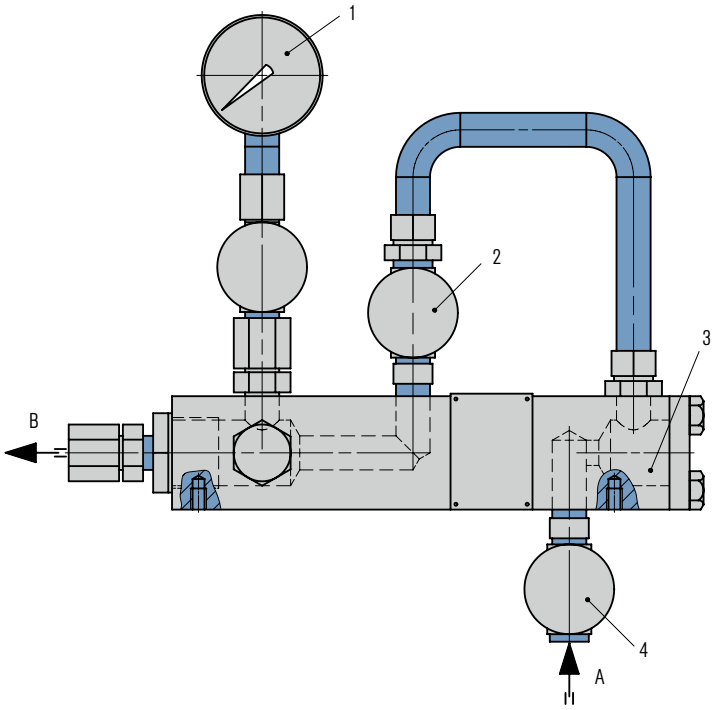

Features

The EagleBurgmann flush unit of the SPX6000-A4 range consists of a manifold with integrated inline filter supplied together with a needle valve and pressure gauge. Optional available with temperature gauge and/or flow indicator. The unit is used to control the flushing of a mechanical seal.

Advantages

- Compact design due to integral filter
- Modular concept – optimal monitoring equipment available

Recommended applications

- Refining technology
- Oil and gas industry
- Petrochemical industry
- Chemical industry
- Power plant technology

Functional description

The SPX6000-A4 flush unit continuously supplies flushing media from an external source to the mechanical seal. This plan is almost always used in combination with a throat bushing which serve as a throttle device to maintain a higher pressure in the stuffing box to isolate the pumped product from the seal chamber.

Item	Description
1	Pressure indicator
2	Needle valve
3	Integral filter
4	Valve
A	From external source
B	To mechanical seal

Product variants

Designation	SPX6000-A4
Allowable pressure[1)]	44 bar (638 PSI)
Allowable temperature[1)]	−20 °C ... +120 °C (−4 °F ... +248 °F)
Process connections	1/2" NPT
Metal parts	316L

Other versions on request.

[1)] Design data, permissible working values depend on the actual conditions of service.

Plan 53A

TSA6 Barrier/buffer fluid system

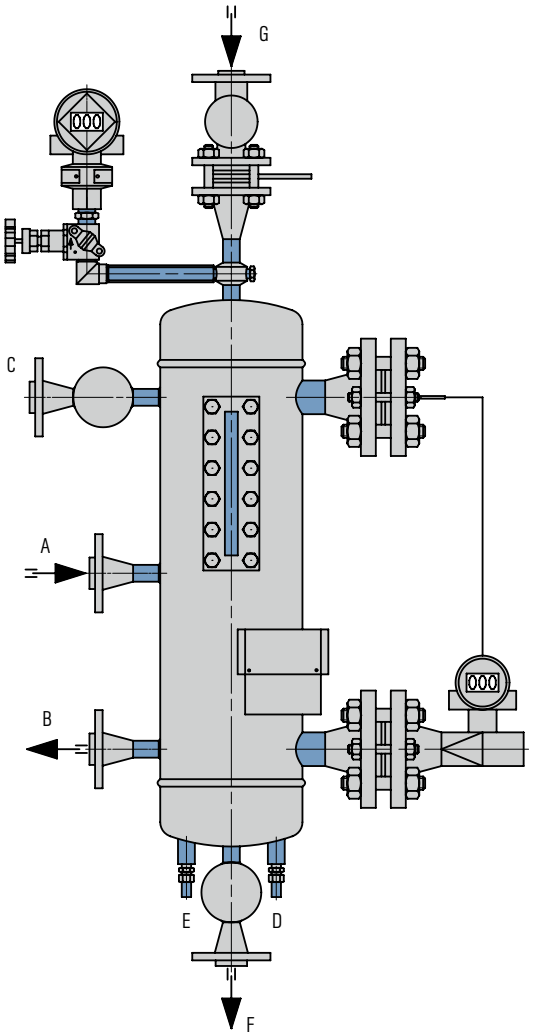

Features

The EagleBurgmann barrier/buffer fluid systems of the TSA6000-A4 range meet all the requirements to supply mechanical seals in accordance with the API682 4th edition guidelines. The vessels are equipped with all essential connections for fitting additional components. The range is available in two standard vessel sizes with dished heads, and a bottom-flanged version which can be dismantled (TSB6000-A4) is also available. The modular system allows the TSA6000-A4 vessels to be combined with a wide range of system components such as level transmitter, pressure transmitter, base frame, etc.

Advantages

- Operating limits up to 44 bar/260 °C (638 PSI/500 °F): suitable for a wide range of demanding operating conditions
- Robust design with weld-pad type sightglass for optimum visual level monitoring
- Modular system: combination possible with a wide range of system components

Recommended applications

- Refining technology
- Oil and gas industry
- Petrochemical industry
- Chemical industry
- Power plant technology

Notes

Design and production available in accordance with EU Pressure Equipment Directive PED 97/23 EC. Design, calculation and production available acc. to ASME VIII, Div. 1.
3rd party inspection, ASME stamp on request.

Functional description

The TS system performs all the basic functions of a barrier/buffer system for the operation of dual seals:

- To pressurize the barrier/buffer chamber
- Leakage compensation
- Barrier/buffer fluid is circulated by thermosiphon effect or forced circulation system
- To cool the seal
- To selectively absorb product leakage and prevent dry running (tandem arrangement)

Use compressed air or nitrogen for pressurization; pressurization is monitored by a pressure transmitter (default). The incorporated level transmitter issues a signal whenever the level of barrier/buffer fluid is too low.

Installation

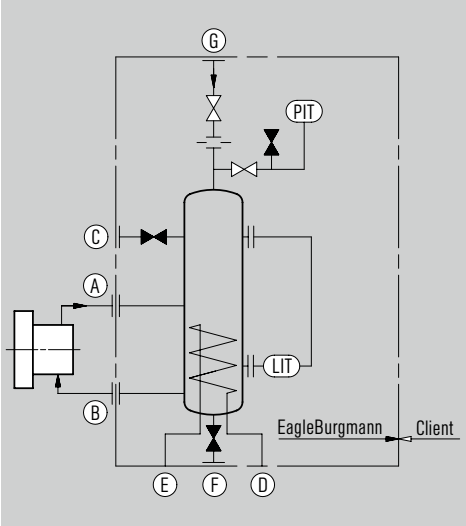

P&ID for TSA6000-A4, Plan 53A
A From mechanical seal
B To mechanical seal
C Filling connection
D Cooling water IN
E Cooling water OUT
F Drain
G N2 IN

Product variants

Designation	TSA6000-A4	TSA6001-A4	TSA6002-A4	TSA6003-A4
Pressure Equipment Directive	ASME	PED	ASME	PED
For shaft diameters ≤60 mm (acc. to API 682)	X	X		
For shaft diameters >60 mm (acc. to API 682)			X	X
Integrated cooling coil	X	X	X	X
Volume, vessel (liters)	15	15	26	26
Volume, tube (liters)	0.3	0.3	0.4	0.4
Allowable pressure – shell[1)]	44 bar (638 PSI)	44 bar (638 PSI)	44 bar (638 PSI)	44 bar (638 PSI)
Allowable pressure – tube[1)]	44 bar (638 PSI)	44 bar (638 PSI)	44 bar (638 PSI)	44 bar (638 PSI)
Allowable temperature – vessel[1)]	–29 °C ... +260 °C (–20 °F ... +500 °F)	–29 °C ... +260 °C (–20 °F ... +500 °F)	–29 °C ... +260 °C (–20 °F ... +500 °F)	–29 °C ... +260 °C (–20 °F ... +500 °F)
Allowable temperature – system[1)]	–29 °C ... +260 °C (–20 °F ... +500 °F)	–29 °C ... +260 °C (–20 °F ... +500 °F)	–29 °C ... +260 °C (–20 °F ... +500 °F)	–29 °C ... +260 °C (–20 °F ... +500 °F)
Liquid volume at NLL – Normal Liquid Level (liters)	12	12	20	20
Working volume MAX-MIN (liters)	4	4	6.5	6.5
Cooling capacity – without cooling water (kW)[3)]	0.75	0.75	1	1
Cooling capacity – natural circulation (kW)[2)]	1.9	1.9	2.5	2.5
Cooling capacity – forced circulation (kW)[2)]	5	5	6.5	6.5
Required cooling water quantity (m^3/h)	0.4	0.4	0.7	0.7
Metal parts	316L	316L	316L	316L
Sight-glass	Borosilicate	Borosilicate	Borosilicate	Borosilicate
Gaskets	PTFE	PTFE	PTFE	PTFE
Net weight (approx.)	68 kg (150 lbs)	68 kg (150 lbs)	75 kg (165 lbs)	75 kg (165 lbs)

Other versions on request.
[1)] Design data, permissible working values depend on the actual conditions of service.
[2)] Guidelines with barrier/buffer fluid water 60 °C (140 °F) – cooling water 20 °C (68 °F).
[3)] Guidelines with barrier/buffer fluid water 60 °C (140 °F) – ambient temperature 20 °C (68 °F)
(valid for thermosiphon systems without cooling water with natural circulation resp. forced circulation).

Plan 53A

TSB6 Barrier/buffer fluid system

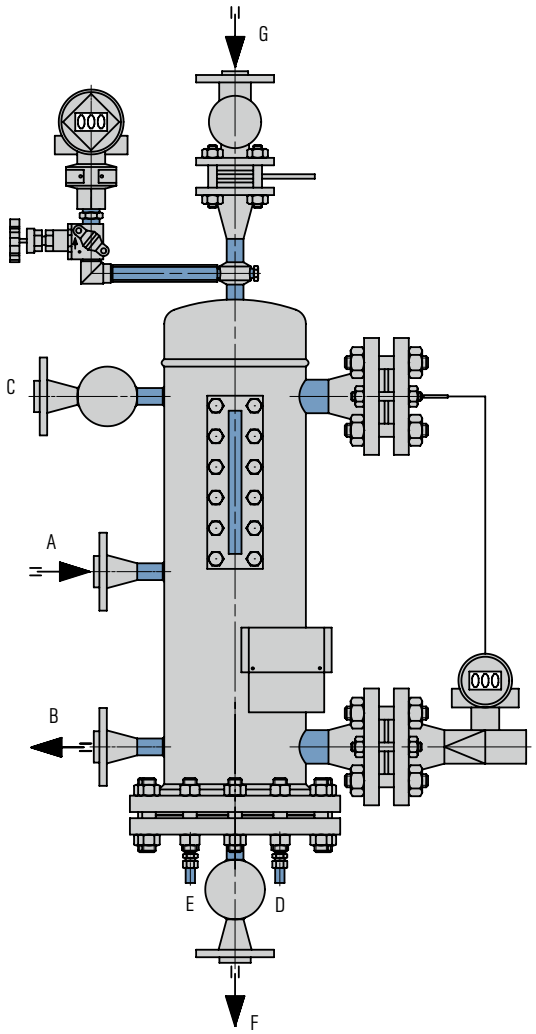

Features

The EagleBurgmann barrier/buffer fluid systems of the TSB6000-A4 range meet all the requirements to supply mechanical seals in accordance with the API682 4th edition guidelines. The vessels are equipped with all essential connections for fitting additional components. TSB6 bottom-flanged vessels are available in two standard sizes. A version with dished heads (TSA6000-A4) is also available. The modular system allows the TSB6000-A4 vessels to be combined with a wide range of system components such as level transmitter, pressure transmitter, base frame, etc.

Advantages

- Operating limits up to 44 bar/260 °C (638 PSI/500 °F): suitable for a wide range of demanding operating conditions
- Robust design with weld-pad type sightglass for optimum visual level monitoring
- Modular system: combination possible with a wide range of system components

Recommended applications

- Refining technology
- Oil and gas industry
- Petrochemical industry
- Chemical industry
- Power plant technology

Notes

Design and production available in accordance with EU Pressure Equipment Directive PED 97/23 EC. Design, calculation and production available acc. to ASME VIII, Div. 1.
3rd party inspection, ASME stamp on request.

Functional description

The TS system performs all the basic functions of a barrier/buffer system for the operation of dual seals:

- To pressurize the barrier/buffer chamber
- Leakage compensation
- Barrier/buffer fluid is circulated by thermosiphon effect or forced circulation system
- To cool the seal
- To selectively absorb product leakage and prevent dry running (tandem arrangement)

Use compressed air or nitrogen for pressurization; pressurization is monitored by a pressure transmitter (default). The incorporated level transmitter issues a signal whenever the level of barrier/buffer fluid is too low.

Installation

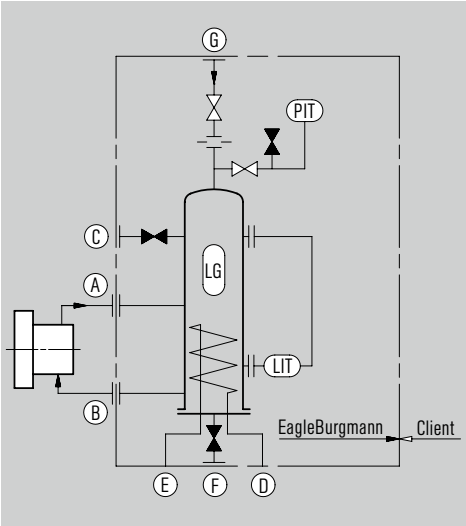

P&ID for TSB6000-A4, Plan 53A
A From mechanical seal
B To mechanical seal
C Filling connection
D Cooling water IN
E Cooling water OUT
F Drain
G N2 IN

Product variants

Designation	TSB6000-A4	TSB6001-A4	TSB6002-A4	TSB6003-A4
Pressure Equipment Directive	ASME	PED	ASME	PED
For shaft diameters ≤60 mm (acc. to API 682)	X	X		
For shaft diameters >60 mm (acc. to API 682)			X	X
Integrated cooling coil	X	X	X	X
Volume, vessel (liters)	15	15	26	26
Volume, tube (liters)	0.3	0.3	0.4	0.4
Allowable pressure – shell[1)]	44 bar (638 PSI)	44 bar (638 PSI)	44 bar (638 PSI)	44 bar (638 PSI)
Allowable pressure – tube[1)]	44 bar (638 PSI)	44 bar (638 PSI)	44 bar (638 PSI)	44 bar (638 PSI)
Allowable temperature – vessel[1)]	–29 °C ... +260 °C (–20 °F ... +500 °F)	–29 °C ... +260 °C (–20 °F ... +500 °F)	–29 °C ... +260 °C (–20 °F ... +500 °F)	–29 °C ... +260 °C (–20 °F ... +500 °F)
Allowable temperature – system[1)]	–29 °C ... +260 °C (–20 °F ... +500 °F)	–29 °C ... +260 °C (–20 °F ... +500 °F)	–29 °C ... +260 °C (–20 °F ... +500 °F)	–29 °C ... +260 °C (–20 °F ... +500 °F)
Liquid volume at NLL – Normal Liquid Level (liters)	12	12	20	20
Working volume MAX-MIN (liters)	4	4	6.5	6.5
Cooling capacity – without cooling water (kW)[3)]	0.75	0.75	1	1
Cooling capacity – natural circulation (kW)[2)]	1.9	1.9	2.5	2.5
Cooling capacity – forced circulation (kW)[2)]	5	5	6.5	6.5
Required cooling water quantity (m^3/h)	0.4	0.4	0.7	0.7
Metal parts	316L	316L	316L	316L
Sight-glass	Borosilicate	Borosilicate	Borosilicate	Borosilicate
Gaskets	PTFE	PTFE	PTFE	PTFE

Other versions on request.
[1)] Design data, permissible working values depend on the actual conditions of service.
[2)] Guidelines with barrier/buffer fluid water 60 °C (140 °F) – cooling water 20 °C (68 °F).
[3)] Guidelines with barrier/buffer fluid water 60 °C (140 °F) – ambient temperature 20 °C (68 °F)
(valid for thermosiphon systems without cooling water with natural circulation resp. forced circulation).

Plan 53B

SPB6 Barrier fluid system with bladder accumulator

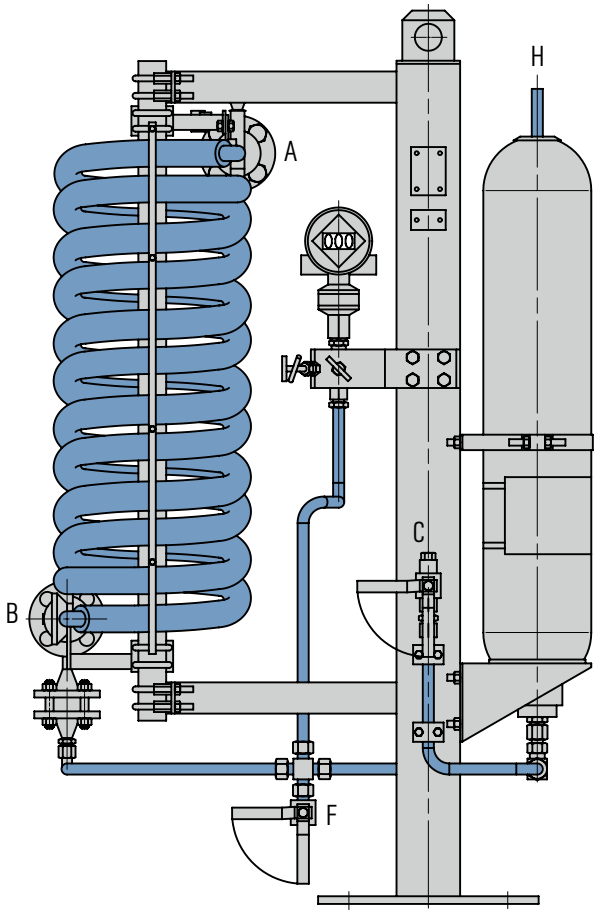

Features

Pressurized barrier system (closed circuit) for use in seal systems with high pressures and/or for hazardous/ environmentally harmful processes. The SPB6000-A4 (Plan 53B) range is available with a pressure accumulator, cooler (finned tube, water or air cooler with fan) and a wide range of instruments. A refilling unit must be provided.

Advantages

- Pressurization occurs by means of a pre-loaded bladder accumulator
- Membranes in the accumulator separate the nitrogen from the barrier medium: nitrogen cannot get into the barrier medium or process medium
- Barrier pressure is created without any need for connection to a nitrogen supply
- Available with finned tube, water or air coolers with fan
- Modular system: combination possible with a wide range system components/instruments

Recommended applications

- Refining technology
- Oil and gas industry
- Petrochemical industry
- Chemical industry
- Power plant technology

Functional description

The SPB6000-A4 is designed to perform the following functions of a barrier system:

- To pressurize the buffer chamber
- Leakage compensation
- To cool the seal

Pressurization (> process pressure) prevents the process medium from getting into the barrier circuit or the atmosphere. Pressurization is supplied by a pressure accumulator which is pre-loaded with nitrogen. Circulation in the barrier circuit occurs via the thermosiphon principle or by forced circulation, e. g., with a pumping screw.

Notes

Design and production available in accordance with EU Pressure Equipment Directive PED 97/23 EC. Design, calculation and production available acc. to ASME VIII, Div. 1.
3rd party inspection, ASME stamp on request.

Installation

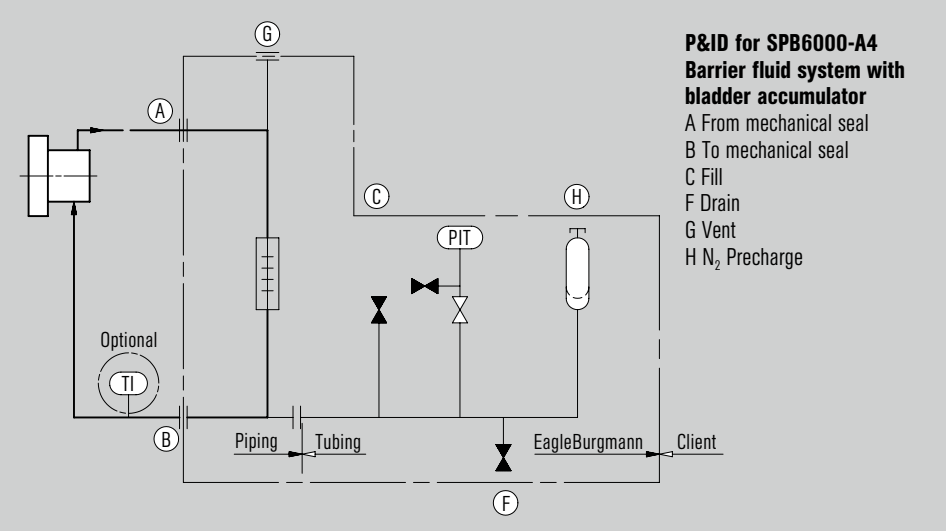

P&ID for SPB6000-A4
Barrier fluid system with bladder accumulator

A From mechanical seal
B To mechanical seal
C Fill
F Drain
G Vent
H N_2 Precharge

Product variants

Designation	**SPB6000-A4**		**SPB6001-A4**		**SPB6002-A4**		**SPB6003-A4**	
Pressure Equipment Directive	ASME		PED		ASME		PED	
Type of heat exchanger	Air cooler [a]	Water cooler [b]	Air cooler [a]	Water cooler [b]	Air cooler [a]	Water cooler [b]	Air cooler [a]	Water cooler [b]
For shaft diameters ≤ 60 mm (acc. to API 682)	X		X					
For shaft diameters > 60 mm (acc. to API 682)					X		X	
Bladder accumulator (liters)	20		20		35		35	
Allowable pressure[1]	44 bar (638 PSI)		44 bar (638 PSI)		44 bar (638 PSI)		44 bar (638 PSI)	
Allowable temperature bladder accumulator[1]	−20 °C ... +90 °C (−4 °F ... +194 °F)		−20 °C ... +90 °C (−4 °F ... +194 °F)		−20 °C ... +90 °C (−4 °F ... +194 °F)		−20 °C ... +90 °C (−4 °F ... +194 °F)	
Allowable temperature system[1]	−20 °C ... +90 °C (−4 °F ... +194 °F)		−20 °C ... +90 °C (−4 °F ... +194 °F)		−20 °C ... +90 °C (−4 °F ... +194 °F)		−20 °C ... +90 °C (−4 °F ... +194 °F)	
Cooling capacity – with water cooled heat exchanger (kW)[2]		10		10		10		10
Cooling capacity – with water cooled heat exchanger (kW)[3]		3		3		3		3
Required cooling water quantity (m^3/h)		0.6		0.6		0.6		0.6
Cooling capacity – with air cooled heat exchanger (kW)[4]	2.0		2.0		2.0		2.0	
Cooling capacity – with air cooled heat exchanger (kW)[5]	1.5		1.5		1.5		1.5	
Metal parts	316L		316L		316L		316L	
Accumulator	CrMo steel		CrMo steel		CrMo steel		CrMo steel	
Bladder	Nitrile		Nitrile		Nitrile		Nitrile	

Other versions on request.
[1] Design data, permissible working values depend on the actual conditions of service.
[2] Guidelines with barrier fluid water 60 °C (140 °F) – cooling water 20 °C (68 °F).
[3] Guidelines with barrier fluid oil 60 °C (140 °F) – cooling water 20 °C (68 °F).
[4] Guidelines with barrier fluid water 60 °C (140 °F) – ambient temperature 20 °C (68 °F); moved air at min. 0,7 m/s (2.3 ft/s); product flow rate 8 l/min.
[5] Guidelines with barrier fluid oil 60 °C (140 °F) – ambient temperature 20 °C (68 °F); moved air at min. 0,7 m/s (2.3 ft/s); product flow rate 8 l/min.

[a] WEL6002-A4
[b] WEF6000-A4

Plan 53C

SPC6 Barrier fluid system with piston accumulator

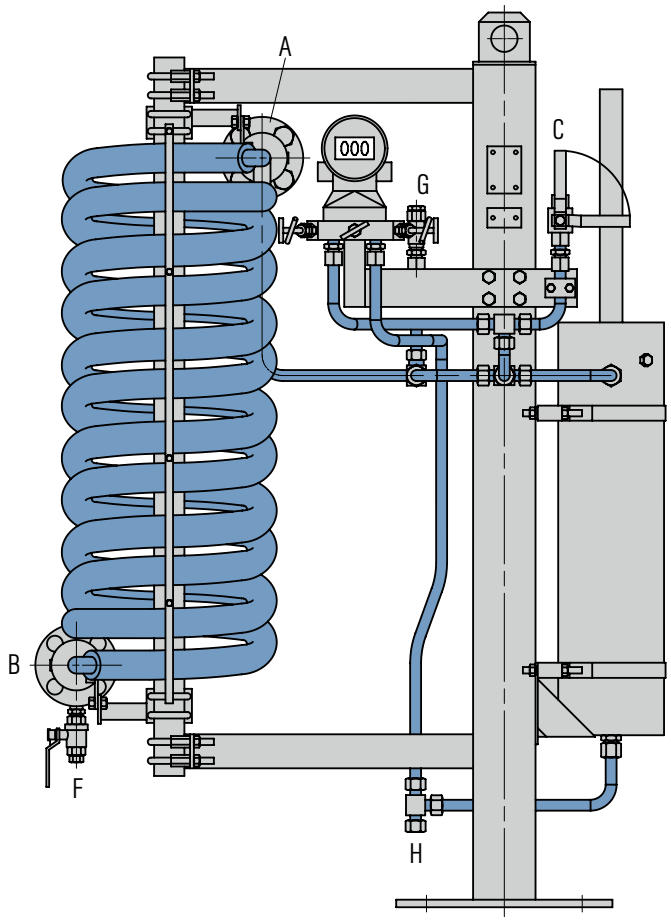

Features

Pressurized barrier system (closed circuit) for use in seal systems with high pressures and/or for hazardous/environmentally harmful processes. The SPC6000-A4 (Plan 53C) range is available with a pressure booster, cooler (finned tube, water or air cooler with fan) and a wide range of instruments. A refilling unit must be provided.

Advantages

- Pressurization occurs by means of a pressure booster
- Automatic setting of the barrier pressure via reference pressure: simple and reliable mode of operation
- Safe operation even in case of pressure changes
- Barrier pressure is created without any need for connection to a nitrogen supply
- Available with finned tube, water or air coolers with fan
- Modular system: combination possible with a wide range system components/instruments

Recommended applications

- Refining technology
- Oil and gas industry
- Petrochemical industry
- Chemical industry
- Power plant technology

Functional description

The SPC6000-A4 is designed to perform the following functions of a barrier system:

- To pressurize the buffer chamber
- Leakage compensation
- To cool the seal

Pressurization (> process pressure) prevents the process medium from getting into the barrier circuit or the atmosphere. Circulation in the barrier circuit occurs via the thermosiphon principle or by forced circulation, e. g., with a pumping screw.

Notes

Design and production available in accordance with EU Pressure Equipment Directive PED 97/23 EC. Design, calculation and production available acc. to ASME VIII, Div. 1.
3rd party inspection, ASME stamp on request.

Installation

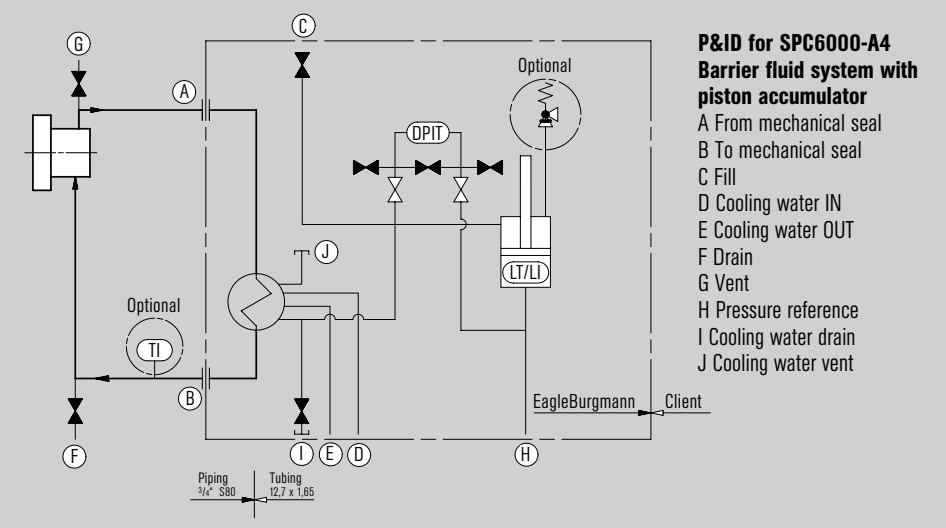

P&ID for SPC6000-A4
Barrier fluid system with piston accumulator

A From mechanical seal
B To mechanical seal
C Fill
D Cooling water IN
E Cooling water OUT
F Drain
G Vent
H Pressure reference
I Cooling water drain
J Cooling water vent

Product variants

Designation	**SPC6000-A4**		**SPC6001-A4**		**SPC6002-A4**		**SPC6003-A4**	
Pressure Equipment Directive	ASME		PED		ASME		PED	
Type of heat exchanger	Air cooler [a]	Water cooler [b]	Air cooler [a]	Water cooler [b]	Air cooler [a]	Water cooler [b]	Air cooler [a]	Water cooler [b]
For shaft diameters ≤ 60 mm (acc. to API 682)	X		X					
For shaft diameters > 60 mm (acc. to API 682)					X		X	
Piston accumulator (liters)	2.8		2.8		5.1		5.1	
Allowable pressure[1]	44 bar (638 PSI)		44 bar (638 PSI)		44 bar (638 PSI)		44 bar (638 PSI)	
Allowable temperature piston accumulator[1]	−20 °C ... +90 °C (−4 °F ... +194 °F)		−20 °C ... +90 °C (−4 °F ... +194 °F)		−20 °C ... +90 °C (−4 °F ... +194 °F)		−20 °C ... +90 °C (−4 °F ... +194 °F)	
Allowable temperature system[1]	−20 °C ... +90 °C (−4 °F ... +194 °F)		−20 °C ... +90 °C (−4 °F ... +194 °F)		−20 °C ... +90 °C (−4 °F ... +194 °F)		−20 °C ... +90 °C (−4 °F ... +194 °F)	
Cooling capacity – with water cooled heat exchanger (kW)[2]		10		10		10		10
Cooling capacity – with water cooled heat exchanger (kW)[3]		3		3		3		3
Required cooling water quantity (m^3/h)		0.6		0.6		0.6		0.6
Cooling capacity – with air cooled heat exchanger (kW)[3]	2.0		2.0		2.0		2.0	
Cooling capacity – with air cooled heat exchanger (kW)[3]	1.5		1.5		1.5		1.5	
Metal parts	316L		316L		316L		316L	

Other versions on request.
[1] Design data, permissible working values depend on the actual conditions of service.
[2] Guidelines with barrier fluid water 60 °C (140 °F) – cooling water 20 °C (68 °F).
[3] Guidelines with barrier fluid oil 60 °C (140 °F) – cooling water 20 °C (68 °F).
[4] Guidelines with barrier fluid water 60 °C (140 °F) – ambient temperature 20 °C (68 °F); moved air at min. 0,7 m/s (2.3 ft/s); product flow rate 8 l/min.
[5] Guidelines with barrier fluid oil 60 °C (140 °F) – ambient temperature 20 °C (68 °F); moved air at min. 0,7 m/s (2.3 ft/s); product flow rate 8 l/min.

[a] WEL6002-A4
[b] WEF6000-A4

Plan 65A

LSA6 Leakage collection reservoir

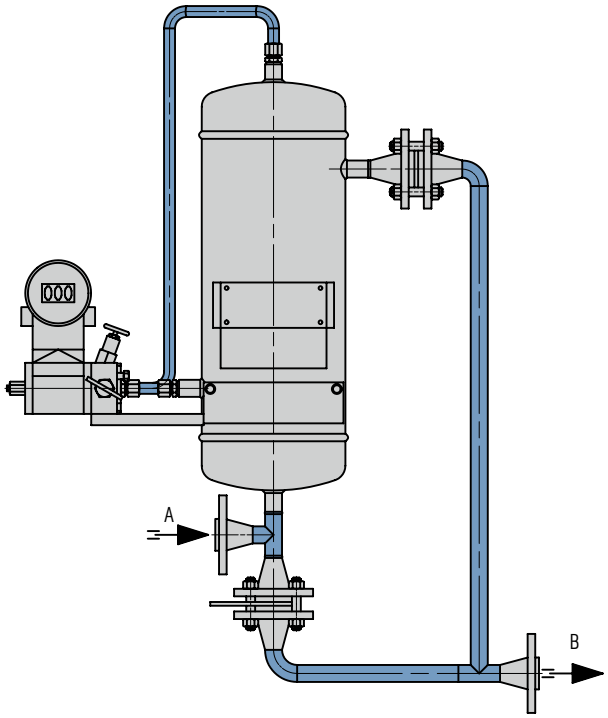

Features

The EagleBurgmann leakage control systems of the LSA6000 range in accordance with API Plan 65A consist of a leakage collection tank with integrated orifice and overflow pipe. The level can be monitored with the differential pressure transmitter which is supplied together with a five-way manifold valve.

Advantages

- Seal failure detection
- Safe discarding of excessive seal leakage
- To ensure durability, all components are corrosion resistant.

Recommended applications

- Refining technology
- Oil and gas industry
- Petrochemical industry
- Chemical industry
- Power plant technology

Functional description

In accordance with API Plan 65A, the LSA6000 leakage control system is used to discharge leakage from single seals. The outboard leakage is collected in an external tank; the leakage volume is monitored (level in the tank).

Notes

Design and production available in accordance with EU Pressure Equipment Directive PED 97/23 EC. Design, calculation and production available acc. to ASME VIII, Div. 1.
3rd party inspection, ASME stamp on request.

Installation

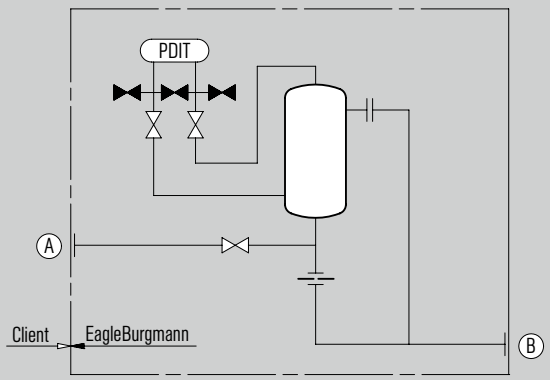

P&ID for LSA6000-A4
Leakage collection system
A From mechanical seal
B To leakage collection system

Product variants

Designation	LSA6000-A4
Pressure Equipment Directive	PED | ASME
Volume of vessel (liters)	4
Allowable pressure[1)]	44 bar (638 PSI)
Allowable temperature[1)]	−20 °C ... +120 °C (−4 °F ... +248 °F)
Connection	Flange 3/4", 600 lbs
Metal parts	316L

Other versions on request.
[1)] Design data, permissible working values depend on the actual conditions of service.

Plan 65B

LSB6 Leakage collection reservoir

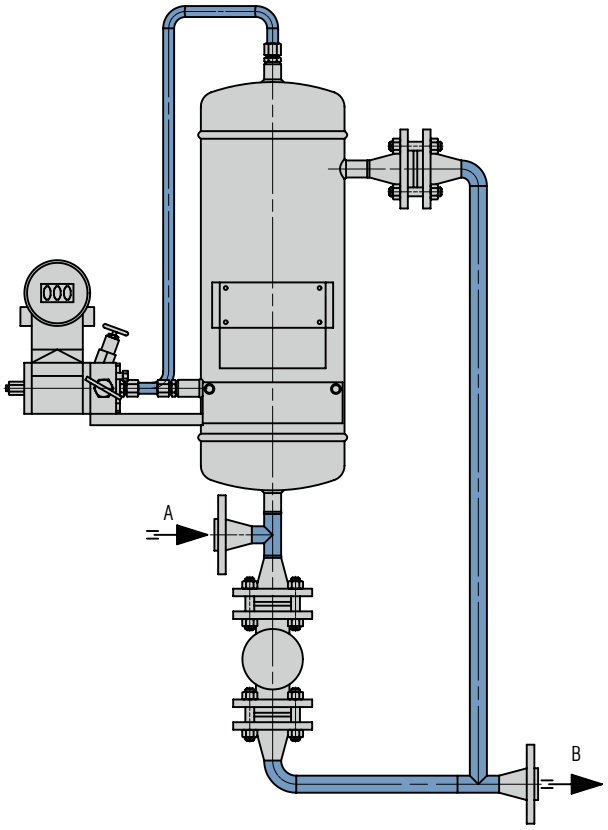

Features

In accordance with API Plan 65B, the EagleBurgmann leakage control systems of the LSB6000 range consist of a leakage collection tank with valve and overflow pipe. The level can be monitored with the differential pressure transmitter which is supplied together with a five-way manifold valve.

Advantages

- Seal failure detection
- Safe discarding of excessive seal leakage
- To ensure durability, all components are corrosion resistant.

Recommended applications

- Refining technology
- Oil and gas industry
- Petrochemical industry
- Chemical industry
- Power plant technology

Functional description

In accordance with API Plan 65B, the LSB6000 leakage control system is used to discharge leakage from single seals. The outboard leakage is collected in an external tank; the leakage volume is monitored (level in the tank).

Notes

Design and production available in accordance with EU Pressure Equipment Directive PED 97/23 EC. Design, calculation and production available acc. to ASME VIII, Div. 1.
3rd party inspection, ASME stamp on request.

Installation

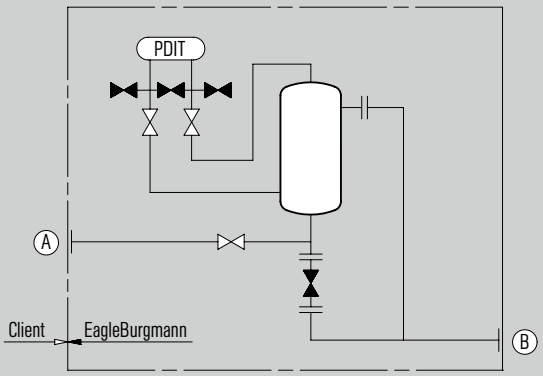

P&ID for LSB6000-A4
Leakage collection system
A From mechanical seal
B To liquid collection system

Product variants

Designation	LSB6000-A4
Pressure Equipment Directive	PED | ASME
Volume of vessel (liters)	4
Allowable pressure[1)]	44 bar (638 PSI)
Allowable temperature[1)]	−20 °C ... +120 °C (−4 °F ... +248 °F)
Connection	Flange 3/4", 600 lbs
Metal parts	316L

Other versions on request.
[1)] Design data, permissible working values depend on the actual conditions of service.

Plans 21 (22), 41

SPT6 Temperature indicator

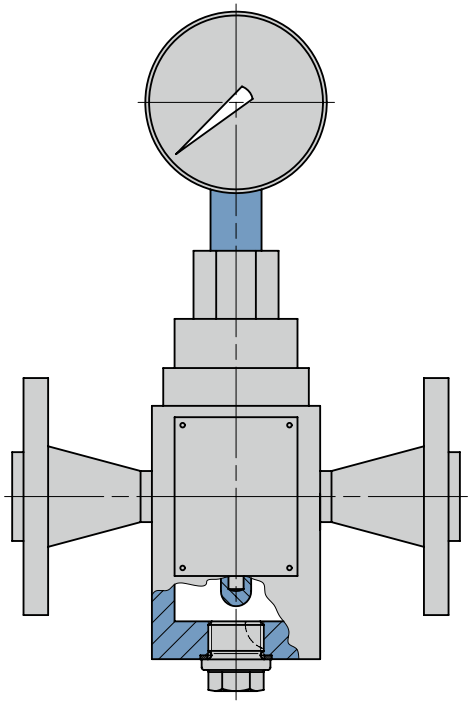

Features

The measuring unit of the SPT6000-A4 range is used to visually monitor the operating temperature.

The measuring unit consists of a bi-metallic temperature gauge (NG100) with protective sleeve installed in a measuring block incl. drain connection.

Advantages

- Operating limits up to 45 bar/260 °C (653 PSI/500 °F) (design parameters)
- Temperature indicating range up to 200 °C (392 °F)
- Wetted parts: Stainless steel 316L for high resistance to corrosive media

Recommended applications

- Refining technology
- Oil and gas industry
- Petrochemical industry
- Chemical industry
- Power plant technology

Product variants

Designation	SPT6000-A4	SPT6000-A4
Connections – process	Flange 3/4", 600 lbs	Flange 3/4", 600 lbs
Connections – drain	G 1/2"	G 1/2"
Allowable pressure[1)]	45 bar (653 PSI)	45 bar (653 PSI)
Temperature range	0 °C ... +120 °C (+32 °F ... +248 °F)	0 °C ... +200 °C (+32 °F ... +392 °F)
Wetted parts	316L	316L

Other versions on request.

[1)] Design data, permissible working values depend on the actual conditions of service.

EagleBurgmann TotalSealCare Service

Our service modules

The modular seal service offered through TotalSealCare is as individual as are the demands of our customers. The range of services spans complete maintenance of all installed seals, through to stock management, as well as engineering, training and electronic data documentation.

Our TotalSealCare services consist of individual modules from which we assemble individualized service packages.

You can benefit from our many years of experience and expertise in all areas of seal technology, and our major store of practical knowledge.

1 Consulting & engineering

After establishing and analyzing all of the seals in a system, we work out standardization concepts based on the as-is status. The results we are hoping for are to reduce the number of seal types, sizes and materials used, and to improve the key figures of the system. We advise you relating to codes of practice and statutory regulations, and indicate what actions need to be taken.

2 Maintenance

In the plant or in the service center, qualified fitters and technicians look after all the aspects of seal maintenance: installation, startup, servicing, conversion, overhaul and repair. We record and document functionally relevant data (fault causes, measures for repair, costs). This means it is possible to assess seal operating times and maintenance costs on a continuous basis, thereby defining measures for extending service intervals.

3 On-site service

Our on-site service includes the components of an overhaul service, conversions and service container. We deploy a service unit directly on your premises: equipped with the basic suite of seals or a stock of seals discussed with you in advance, and staffed by qualified personnel. On-site, our work includes producing the necessary gaskets, ensuring that the documentation is complete and advising our customers on selecting and installing seals. Our range of services is rounded off by complete conversions (e. g. acc. to TA-Luft).

4 Inventory management

Based on your individual requirements and the applicable quality regulations, we develop a concept for inventory management of complete seals and spare parts. Furthermore, we optimize stocking on site or in the EagleBurgmann service center. In this way, you can reduce your administration overhead and concentrate on your key operations.

5 Seminars & training

We offer an extensive range of continuing education programs in seal technology. For service and maintenance personnel, skilled staff and engineers from various branches of industry such as refining, chemicals, power generation, foodstuffs, paper and pharmaceuticals. Our range includes group seminars, individual training and seminars specifically tailored to your requirements. At our premises or at a location of your choice.

6 Technical analysis & support

A team of seal specialists is responsible for rectifying process malfunctions or “bad actors”. The latest methods such as thermography or data logging are used for diagnosing positions that are critical for the operation of the system and for working out measures to rectify them. In our research and development centers, we perform realistic tests on test rigs or in original pumps. The objective is to extend the MTBF and to increase system serviceability by individual and constructive solutions.

7 Service agreements

We offer our customers specific agreements that can be combined from the six service modules. Whether for individual seal systems, critical process elements, specific system areas or an extensive seal service for complete plants: the modular structure of our service makes it possible to satisfy individual requirements. With our tried-and-tested monitoring instrument, SEPRO, we can also record all data relevant for the seals for documentation and evaluation purposes.

Argentina · Australia · Austria · Belarus · Belgium · Brazil · Bulgaria · Canada · Chile · China · Colombia · Cyprus · Czech Republic · Denmark · Ecuador · Egypt · Estonia
Finland · France · Germany · Great Britain · Greece · Hungary · India · Indonesia · Iraq · Israel · Italy · Japan · Jordan · Kazakhstan · Korea · Kuwait · Latvia · Libya
Lithuania · Malaysia · Mauritius · Mexico · Morocco · Myanmar · Netherlands · New Zealand · Nigeria · Norway · Oman · Pakistan · Paraguay · Peru · Philippines
Poland · Qatar · Romania · Russia · Saudi Arabia · Singapore · Slovak Republic · Slovenia · South Africa · Spain · Sweden · Switzerland · Syria · Taiwan · Thailand
Trinidad and Tobago · Tunisia · Turkey · Turkmenistan · Ukraine · United Arab Emirates · Uruguay · USA · Uzbekistan · Venezuela · Vietnam · **eagleburgmann.com/world**

API 682
4th edition

API-C2/3-3CW-BB-E/E2/3.000/11.14/4.4.1 © EagleBurgmann Group Marketing, Germany

EagleBurgmann is one of the internationally leading companies for industrial sealing technology. Our products are used everywhere where safety and reliability are important: in the oil and gas industry, refining technology, the petrochemical, chemical and pharmaceutical industries, food processing, power, water, mining, pulp & paper, aerospace and many other spheres. Every day, more than 6,000 employees contribute their ideas, solutions and commitment towards ensuring that customers all over the world can rely on our seals. Our modular TotalSealCare service underlines our strong customer orientation and offers tailor-made services for every application.

eagleburgmann.com/api682
api682@eagleburgmann.com

EagleBurgmann®
Rely on excellence